LPR GLOBAL	Item Name	Dual Duplexer for Subway DUO-A Type
	Model Name	DD-DUO-A-00B

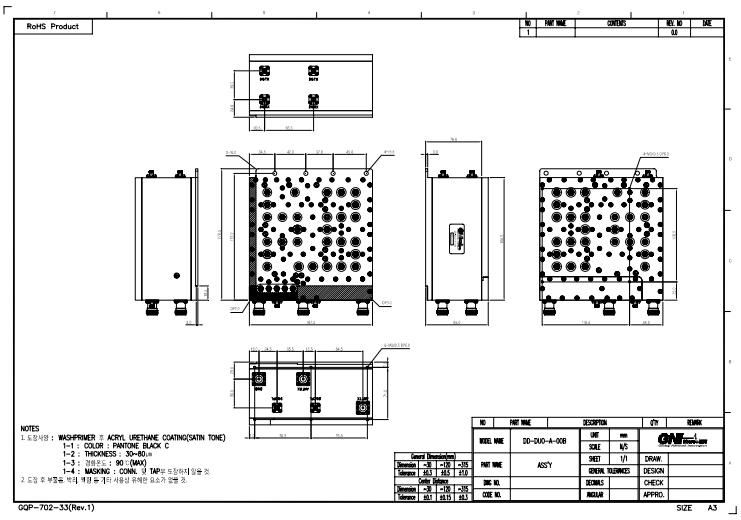

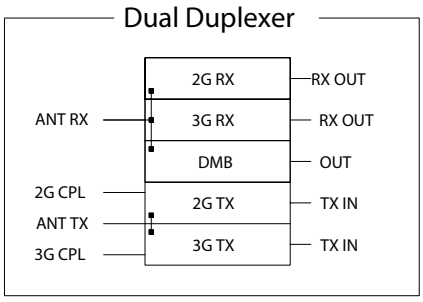

Electrical Specification

Parameter		Specification				
		2G RX	2G TX	3G RX	3G TX	DMB
Frequency Range		824.0~849.0	869.0~894.0	1940.3~1959.7	2130.0~2149.7	2632.5~2652.5
Bandwidth		836.5±12.5	881.5±12.5	1950.0±9.7	2140.0±9.7	2642.5±10.0
Insertion Loss (Max.)		3.5dB	1.5dB	1.5dB	1.5dB	0.3dB
Pass Band Ripple (Max.)		2.5dB	0.3dB	1.0dB	1.0dB	0.1dB
Return Loss (Min.)		18.0dB	18.0dB	18.0dB	18.0dB	18.0dB
Attenuation (Min.)	@821.0 이하	20.0dBc	-	-	-	-
	@851.0 이하	25.0dBc	-	-	-	-
	Fc±12.5	-	-	10.0dB	18.0dB	-
	9.0 ~800.0	-	-	80.0dB	80.0dB	-
	800.0~1870.0	-	-	60.0dB	80.0dB	-
	2.3~2.7	-	-	80.0dB	80.0dB	-
Isolation (Min.)		60.0dBc	60.0dBc	100.0dBc	100.0dBc	50.0dBc
2nd Harmonic (Min.)		-	80.0dBc	-	80.0dBc	-
Delay Variation (Max.)	1FA	-	-	30.0ns	30.0ns	-
	4FA	-	-	30.0ns	30.0ns	-
Coupling Value		-	30.0±1.0dB	-	40.0±1.0dB	-
Coupling Directivity (Min.)		-	15.0dB	-	15.0dB	-
Input Power (Max.)		-	30.0W (Peak)	-	30.0W (Peak)	-
Impedance		50.0±5.0Ω				
Operating Temp.		-30.0~70.0				

Mechanical Specification

Dimensions (W×H×D)	mm	167.0×166.5×85.0
	inch	6.575×6.555×3.346
I/O Port Connectors		N : ANT RX, ANT TX, DMB, SMA : 2G RX, 2G TX, 3G RX, 3G TX, 2G CPL, 3G CPL

LPR GLOBAL	Item Name	Dual Duplexer for Subway DUO-A Type
	Model Name	DD-DUO-A-00B
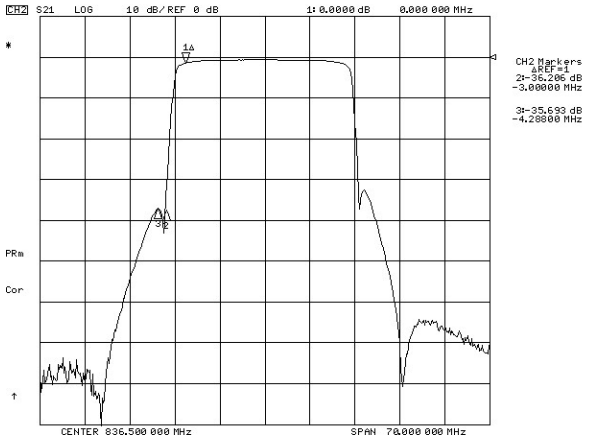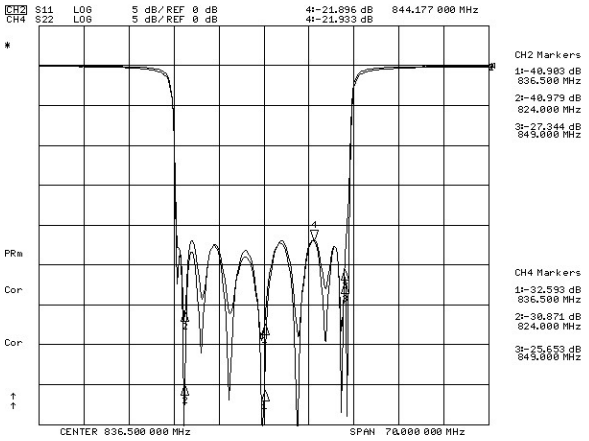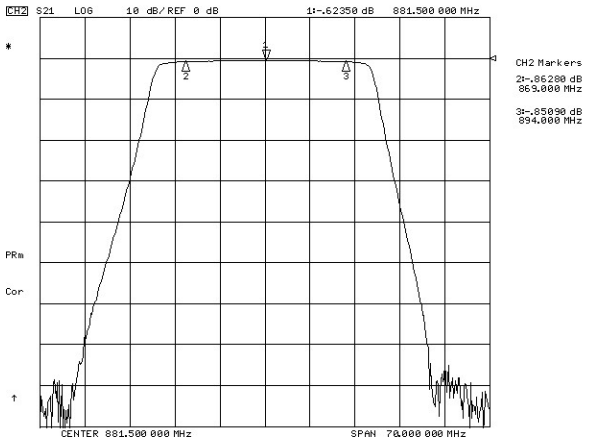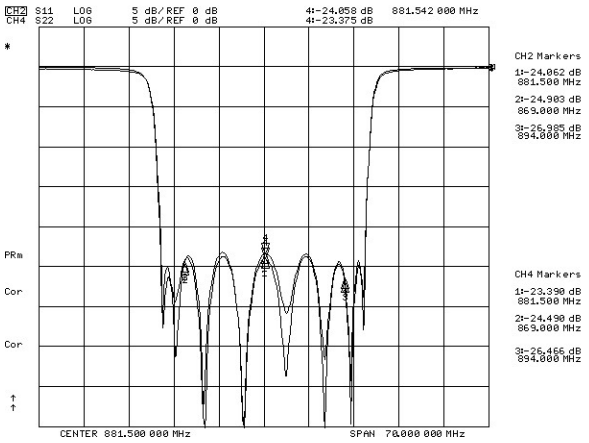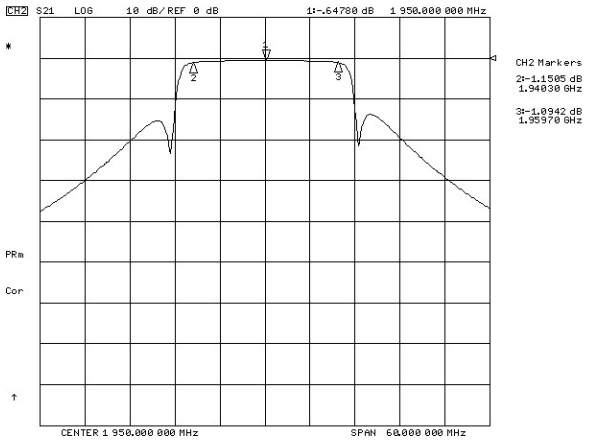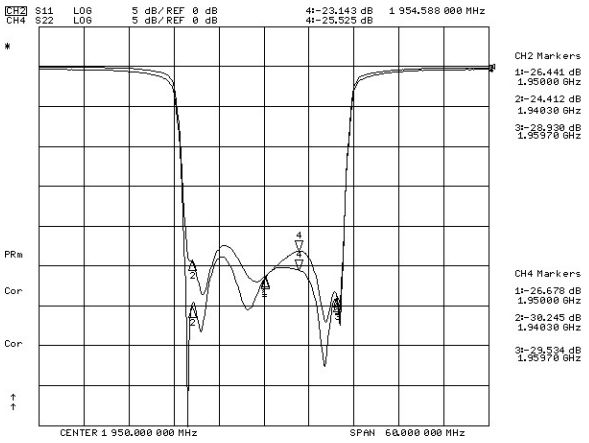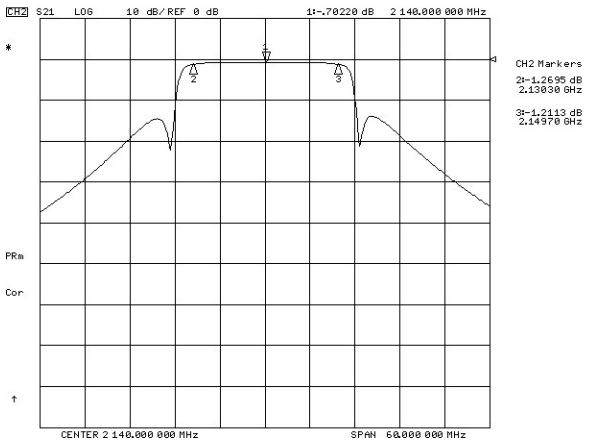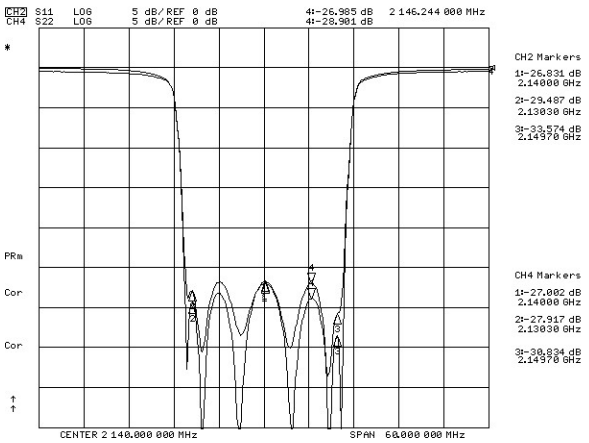
DATA